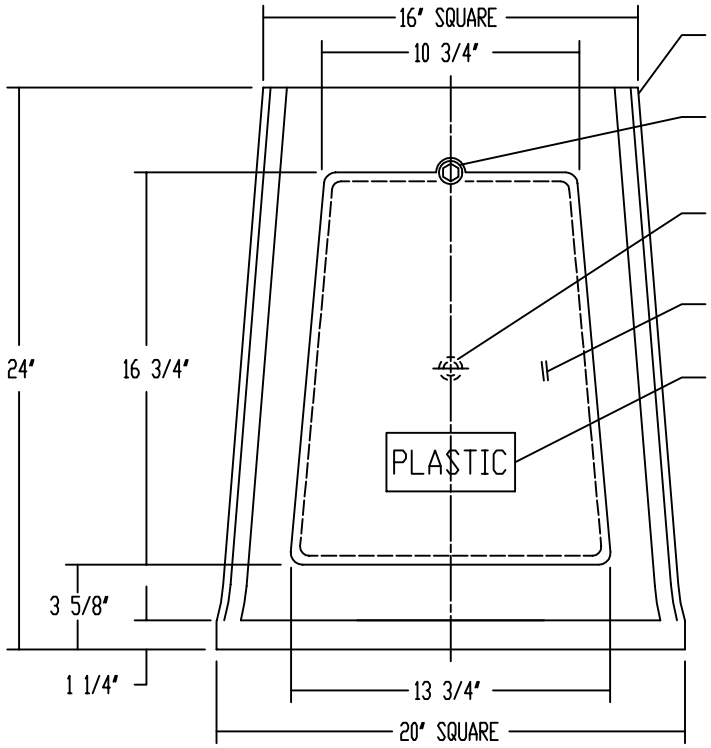

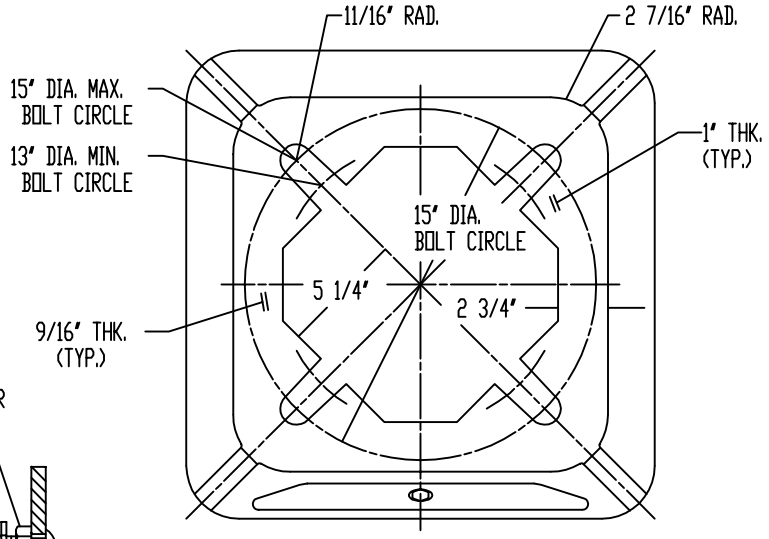

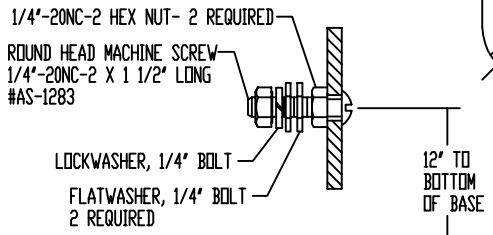

ELECTRICAL GROUNDING DETAIL
(ALL HARDWARE STAINLESS STEEL - PASSIVATED)

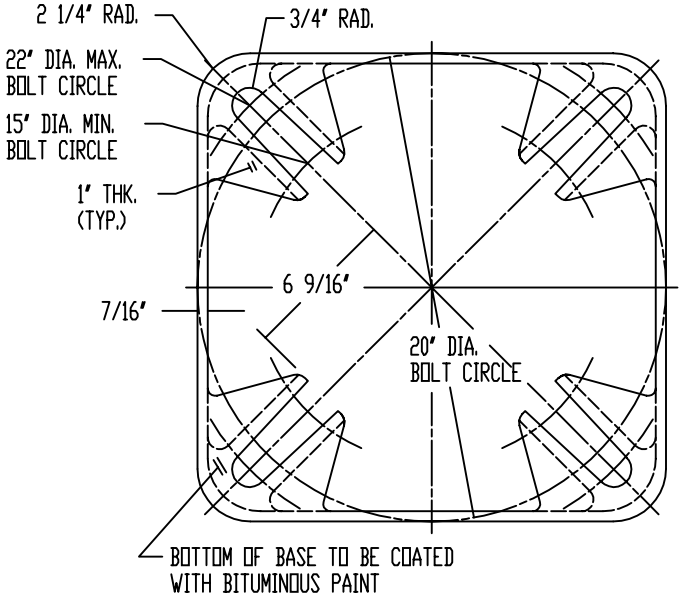

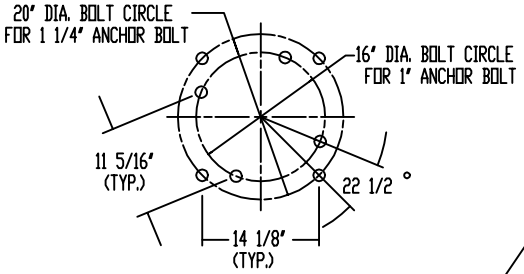

1 1/4"-7NC-2 X 4" LONG HEX HEAD BOLT,
STD. LOCKWASHER AND 1/2" THK. X 2 3/4" O.D.
FLATWASHER - H.R.S. - GALV. (4 OF EACH REQUIRED)

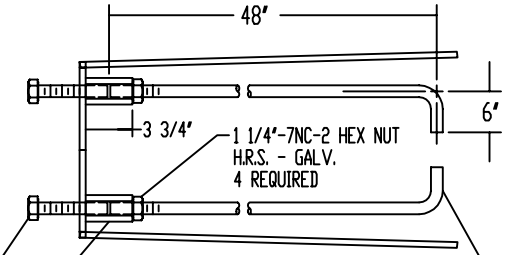

1 1/4"-7NC-2 X 3 3/4" LONG HEX COUPLING
H.R.S. - GALVANIZED (4 REQUIRED)

1 1/4" DIA. X 54" LONG ANCHOR ROD (4 REQUIRED).
ANCHOR ROD TO BE 55,000 PSI MIN. YIELD STRENGTH
PER AASHTO M314-90, GRADE 55. TOP 18" OF ROD TO
BE GALVANIZED PER AASHTO M232 CLASS C, (ASTM A 153).

P&K

ALT.	DESCRIPTION	DATE	BY	CH

MATERIAL
STOCK SIZE
FINISH OR TEMPER
CUSTOMER: BERGEN COUNTY DEPT. OF PUBLIC WORKS

P&K POLE PRODUCTS, INC.
84 Foundry St., Newark, N.J.

TITLE: " TB-M81/BERGEN "
BERGEN CODE TB-12

DR. M.M.S. 06-07-95
CK. W.W.W. 06-07-95
APP.
SCALE: NONE

DWG. NO. C-68095-3